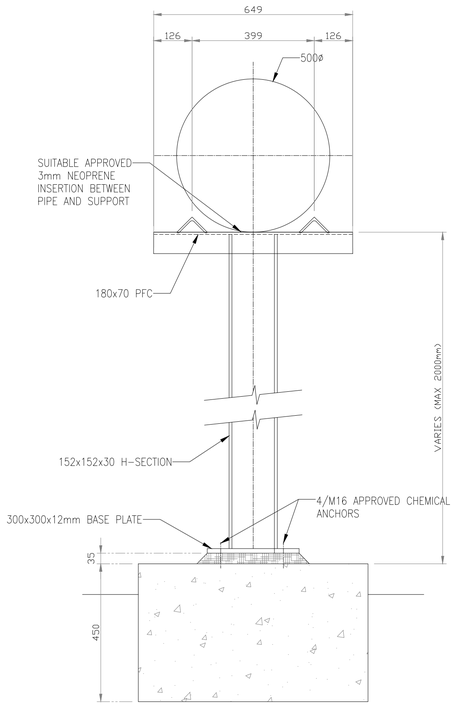


FRONT VIEW
SCALE 1 : 10

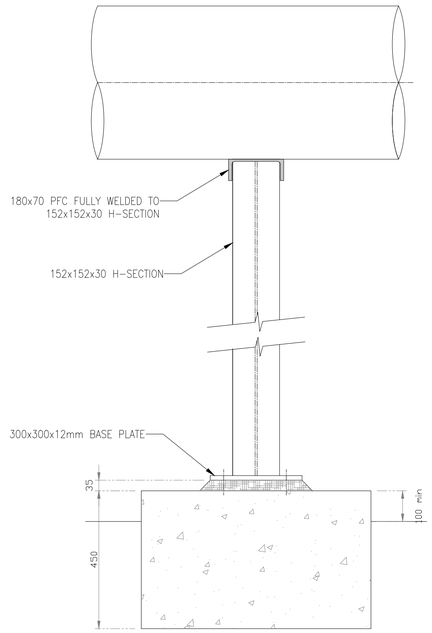


SIDE VIEW
SCALE 1 : 10

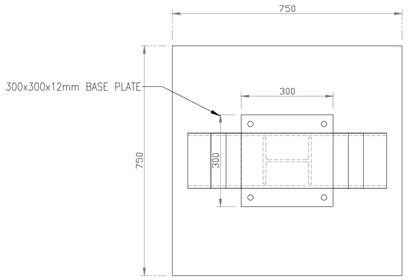


TOP VIEW
SCALE 1 : 50

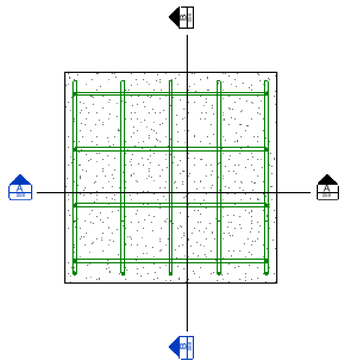

REINFORCEMENT LAYOUT
1 : 10

FOUNDATIONS BENDING SCHEDULE

| BAR MARK | BARS PER MEMBER | TYPE | BAR LENGTH | SHAPE | A | B | C | D | E | r |
|---|---|---|---|---|---|---|---|---|---|---|
| 1 | | | | | | | | | | |
| 01 | 5 | Y12 | 2350 | 60 | 400 | 690 | 0 | 0 | 0 | 0 |
| 02 | 8 | Y12 | 1100 | 35 | 700 | 0 | 0 | 0 | 0 | 0 |

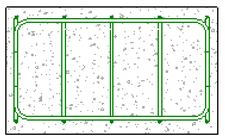

A SECTION A
1 : 10

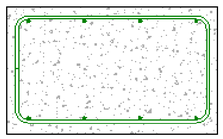

B SECTION B
1 : 10

EPCM BONISANA (PTY) LTD

THIS DRAWING TAKES INTO ACCOUNT THE PARTICULAR INSTRUCTIONS AND REQUIREMENTS OF OUR CLIENT.

IT IS NOT INTENDED FOR AND SHOULD NOT BE RELIED UPON BY ANY THIRD PARTY AND NO RESPONSIBILITY IS UNDERTAKEN TO ANY THIRD PARTY

NOTES:

1. COORDINATE SYSTEM: WGS 84 TRANSVERSE MERCATOR, Lo 29, DATUM: HARTEBEESHOEK 94.
2. ALL DIMENSIONS IN METRES UNLESS OTHERWISE STATED.
3. FOR LAYERWORKS REFER TO FOUNDATION LAYOUT AND LAYERWORKS LAYOUT DWG 21084-KMDD-CE-DAL-009 AND 21084-KMDD-CE-DAL-012

EPCM Bonisana (Pty) Ltd
epcm
ECSA PR Eng.
8770190
H. BOSMAN

epcm
APPROVED FOR CONSTRUCTION

Eskom

EPCM BONISANA
13 ESCORING NOOK
UNIT 3
CENTRAL PARK OFFICES
CENTURION
GAUTENG
0157

epcm

TEL: (+27) 12 665 1085
FAX: (+27) 12 566 2241
EMAIL: INFO@EPCMHOLDINGS.COM
WEB ADDRESS: WWW.EPCMHOLDINGS.COM

| DWG No. | TITLE | No. | REVISION | CAD. | BY | CHK. | APP. | DATE |
|---|---|---|---|---|---|---|---|---|
| 21084-KMDD-CE-DRD-057 | ROAD CROSSING PLAN AND SECTION DETAILS | 1 | APPROVED FOR CONSTRUCTION | DJ | DJ | VWB | SdR | 10.08.23 |

REFERENCE DRAWINGS

| NAME | SIGN | DATE |
|---|---|---|
| – | – | – |

CLIENT APPROVAL

| DISCIPLINE | SIGN | DATE |
|---|---|---|
| PROC. ENG. | C.P. | |
| INSTR. ENG. | J.P. | |
| ELECT. ENG. | J.P. | |
| STRUC. ENG. | H.B. | |
| CIVIL. ENG. | S.d.R. | |
| MECH. ENG. | T.C. | |
| PROJ. MAN. | S.d.R. | |

COMPANY APPROVAL

LOCATION: KRIEL/MATLA POWER STATION, MPUMALANGA
SECTION: PIPELINE
TITLE: PIPELINE CROSSING SUPPORT

| DRAWING No. | REV |
|---|---|
| 21084-KMDD-CE-DRD-069 | 1 |

KRIEL TO MATLA ASH TRANSFER LINK

| PROJECT No.: | 21084 | PAGE SIZE: | A1 |
|---|---|---|---|
| CLIENT DRAWING No. | | | REV |